Final Demo
Chemware Engineering

Group 18

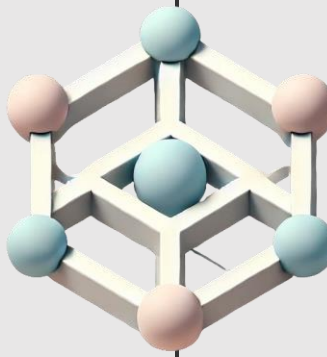

Our Team

Kishor Pandya

Developer

Dhrumil Pandya

Developer

Rasik Pokharel

Developer

Madhu Sivapragasam

Developer

Dr. Mahalec

Project Supervisor

Agenda

01 Project Intro

02 Roadmap

03 Demos

04 Conclusion

05 Q/A

01

Problem

What are we solving? Why are we solving?

What problem are we solving?

Manual Input

Plant parameter to excel sheet

Excel Dependency

Manage > 12 excel sheets to model 1 plant

No GUI

Missing UI to intuitively interact with plant model

User Error Risk

Replicating same information across sheets

Poor Topology Management

Change in one excel sheet cascading to many sheets

How we solved it?

Modeling Chemical Networks via GUI

- Develop e2e web-based UI that is simple and intuitive to use.
- Can develop a chemical plant with simple drag and drop

System Abstraction & Modularity

- Different mode such as simulation etc.
- Data Driven chemical network nodes

Data Persistence & Flow

- Separation of concern between user defined networks and actual system data
- Saving, retrieval and modification of chemical networks

02

Roadmap

How did we get there?

Previous State

	A	B	C	D	E	F	G	H	I	J
6	CM	M	ME	component material						
7	CM	M	ME0	component material						
8	CM	CM*compname*	M	component material						
9	CM	CM*compname*	ME	component material						
10	CM	CM*compname*	ME0	component material						
11	CMS	CM*compname*	M	component material stream						
12	CMS	CM*compname*	ME	component material stream						
13	CMS	CM*compname*	ME0	component material stream						
14	E	E	E	energy						
15	E	E	ME	energy						
16	E	E	ME0	energy						
17	EF	EF	E	energy flow						
18	EF	EF	ME	energy flow						
19	EF	EF	ME0	energy flow						
20	EL	EL	E	electric energy						
21	EL	EL	ME	electric energy						
22	EL	EL	ME0	electric energy						
23	ELF	ELF	E	electric energy flow (power)						
24	ELF	ELF	ME	electric energy flow (power)						
25	ELF	ELF	ME0	electric energy flow (power)						
26	M	M	M	material						
27	MS	MF	M	material stream						
28	MS	MF	ME	material stream						
29	MS	MF	ME0	material stream						
30	MES	MF	ME0	material and energy stream		N				
31	MES	T0	ME0	material and energy stream	Y	N				
32	MES	P	ME0	material and energy stream	Y	N				
33	MES	H	ME0	material and energy stream	Y	N				
34	MES	CP	ME0	material and energy stream	Y	N				
35	CMES	MF	ME0	composite material and energy stream						

SYS System Variables | SYSDomains | CompTaskTypes | SYS Stream Properties | SYS Stream Fractions | SYSNodeVariables | SYSNodeModelLibrary | SYS Port Classes and Vars | SYSNodePortsModelLibrary(RP716) | +

Timeline

01 Idea Generation

02 Technology choices

03 POC

04 SRS and Design

05 Revision 0

06 Additional features

07 Testing

08 Revision 1

09 Project handover

Current State

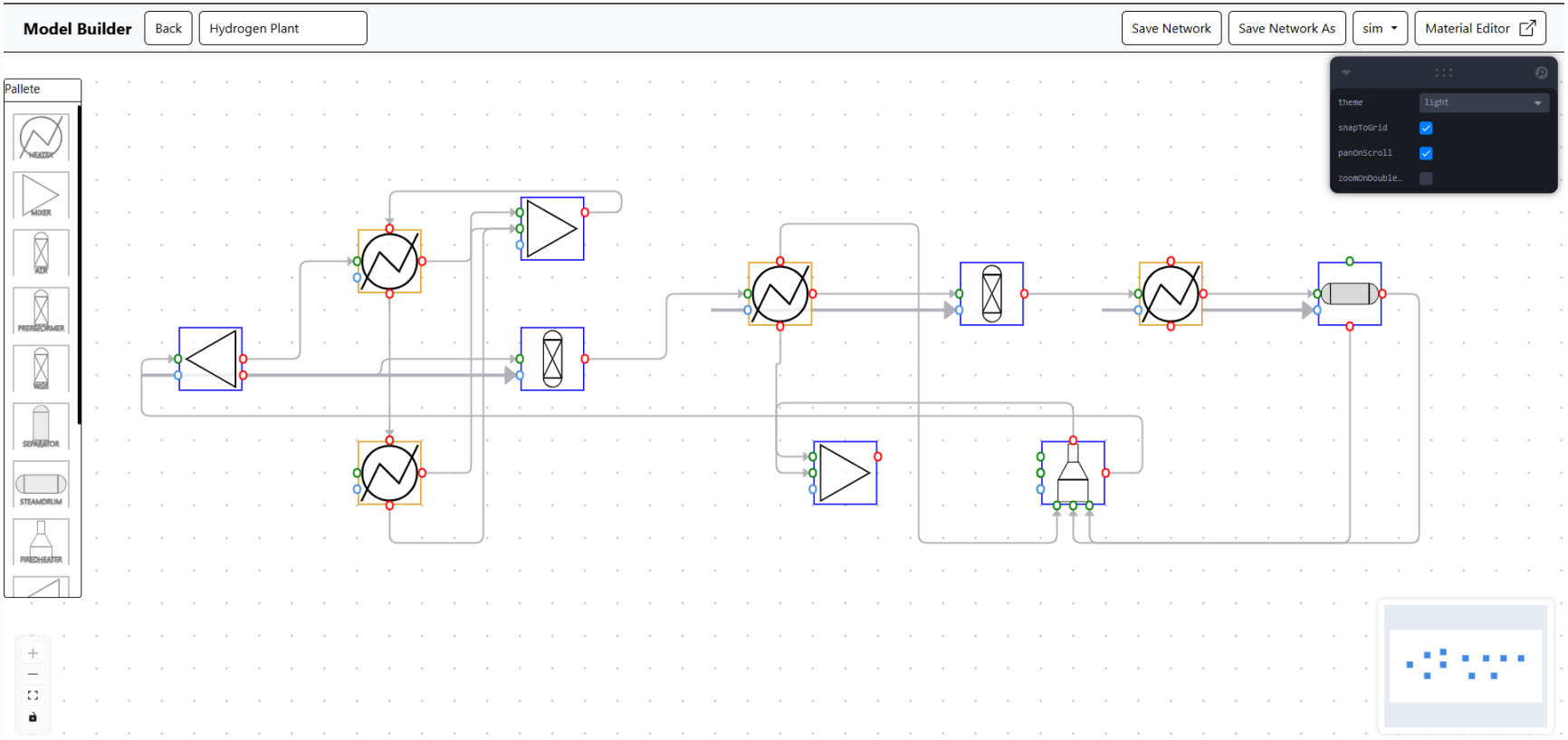

03

Demos

Let’s see it in action!!

Canvas

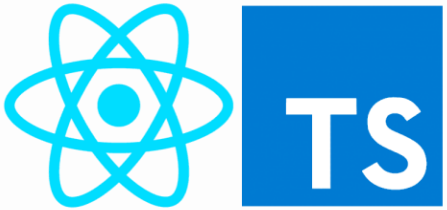

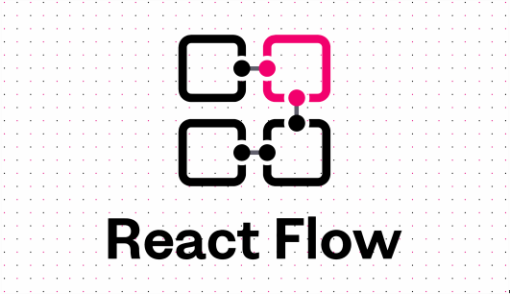

Add, update and delete Nodes

Node parameter Data

Actions from Canvas

Material Editor

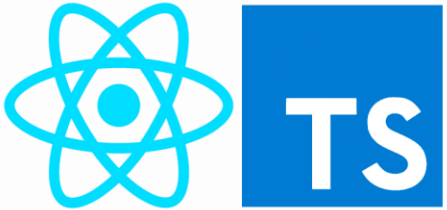

Read existing streams

Delete streams

Upload custom streams

Time Periods

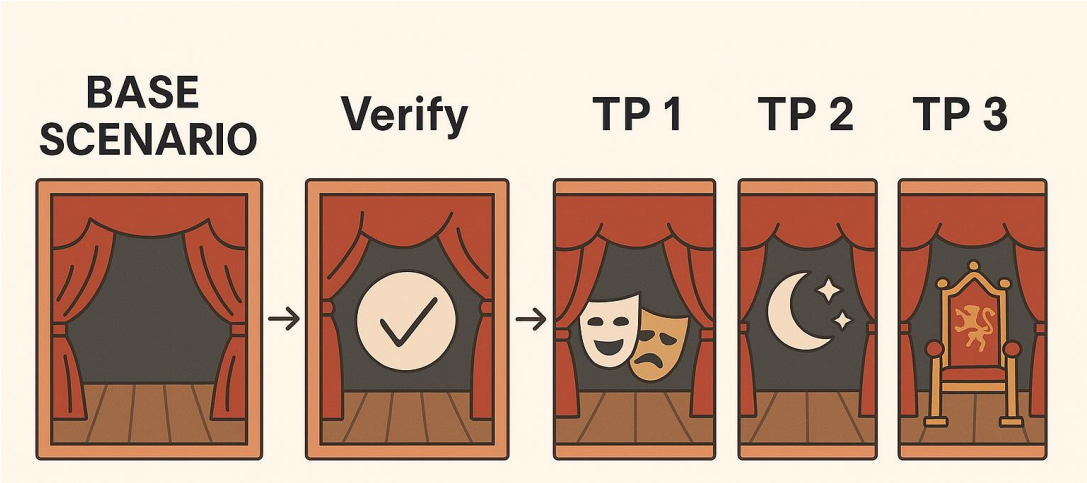

Model Verification

Interacting w/ Time Period

Changing TP data

mongoDB.

System Data

Prisma

PostgreSQL

docker

Add new nodes to the system

Tables and logical structure

Loading system DB pipeline

5

Wrap Up

What are next steps for this project?

Conclusion

Next Steps

Living software project. Will be taken over by Dr. Mahalec's team by April 30th

New Features

Will be adding "good to have" features

Supporting project handover

Instructing new team members on codebase

Thank You!

Special thanks to Dr. Smith, Dr. Mahalec (Grad team) and
Yiding Li (TA) for their incredible support